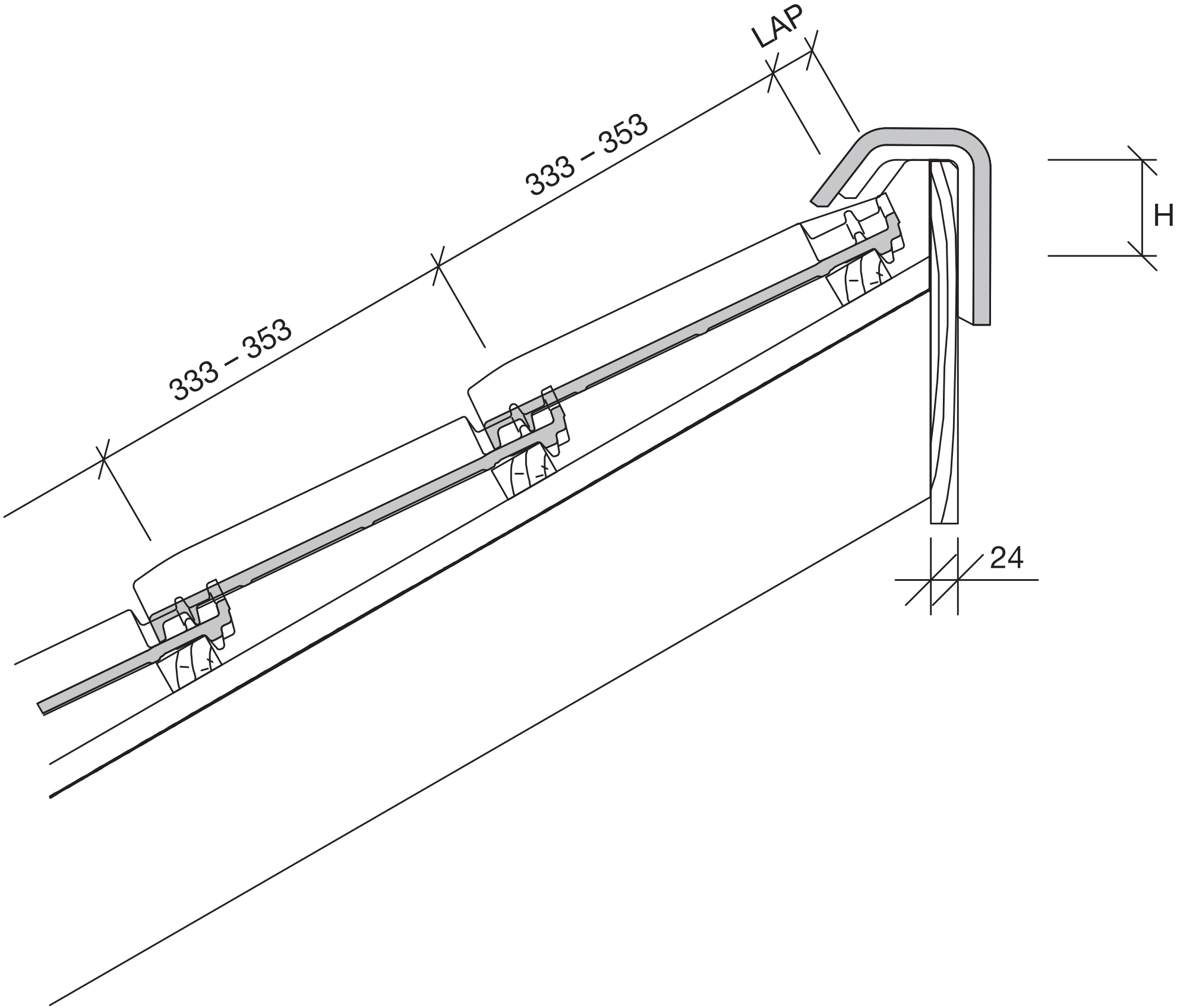
LAP
333 – 353
333 – 353
H
24