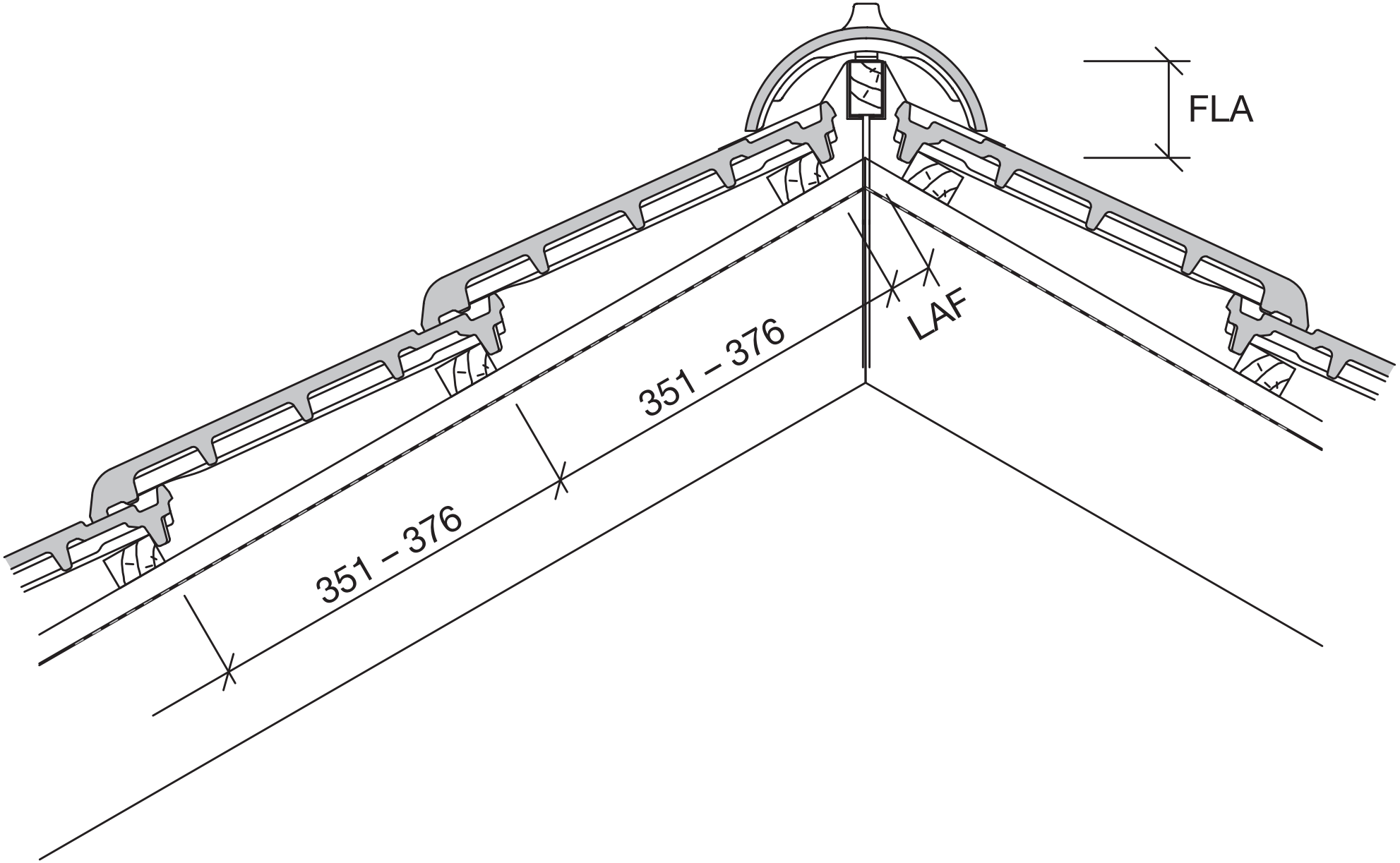
FLA
LAF
351 – 376
351 – 376