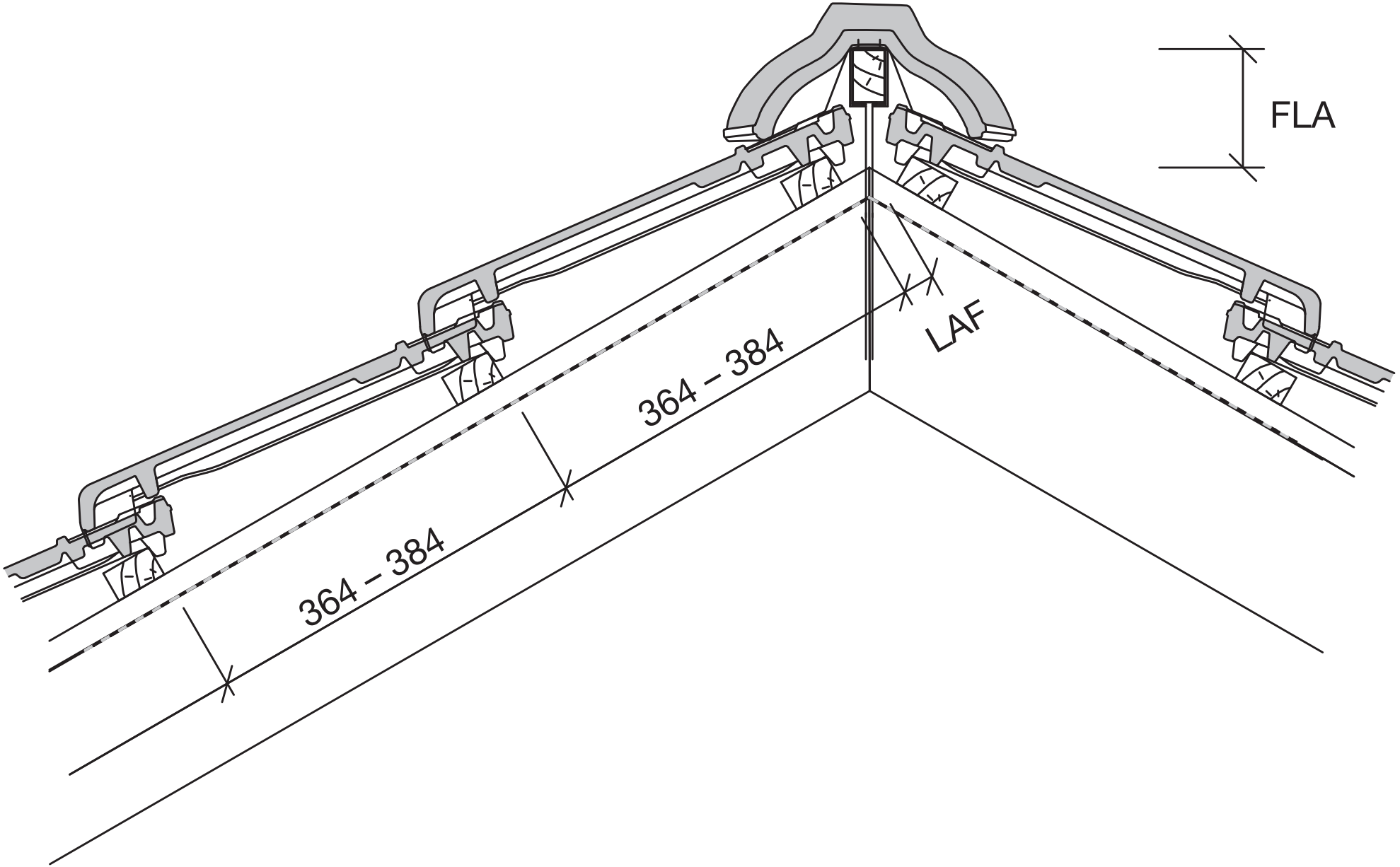
FLA
LAF
364 – 384
364 – 384