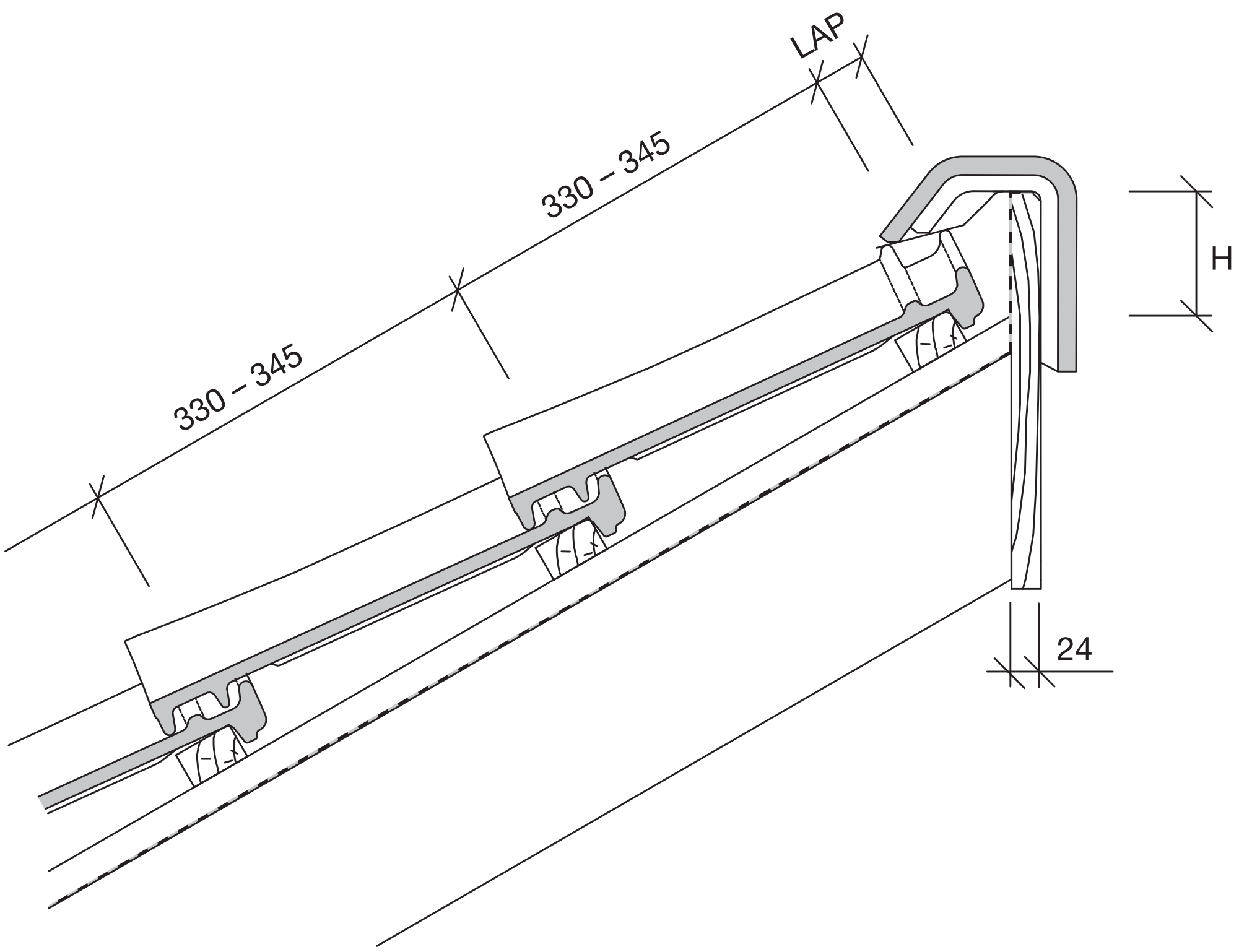
LAP
330 – 345
330 – 345
H
24